DENVER RTD EAGLE P3
COMMUNICATION SYSTEM

OCC~PEI INTERFACE PROPOSAL

CONTRACT NO.	P110701149
CDRL NO.	N/A
WIS DOC. NO.	42C-2016-0001
REVISION:	1.2
DESIGNED:	J. S. JEONG
REVIEWED:	J. Y. LEE
APPROVED:	B. J. JONE
DATE:	1/29/2016

WOOJIN
Industrial Systems Co., Ltd.

Record of Revisions

Rev.	Date	Description	Entered By
1.2	1/29/2016	Initial release	J. S. Jeong

© Copyright Woojin Industrial Systems Co., Ltd.

Table of Contents

1. INTRODUCTION 4
2. BACKGROUND 4
3. GENERAL DESCRIPTION ON PROPOSED SOLUTION 6
4. FUNCTIONS 7
5. COMMISSIONING AND DELIVERY 8
6. LIMITATIONS 8

© Copyright Woojin Industrial Systems Co., Ltd.

1. INTRODUCTION

This document describes proposed methods to achieve the OCC~PEI communication interface.

Please remove historical account from this section as this does not relate to any technical details of the current interface proposal. Woojin's historical account of the interface development should be documented in a separate official letter.

2. BACKGROUND

An interface concern has been raised during implementing the OCC~PEI call integration, where Woojin on-board communication/intercom system is half duplex and the wayside Avaya phone system is full duplex.

Based on the approved design, Woojin's on-board intercom system is half-duplex with analog audio transmission. All on-board intercom functions are based on standard 'push to talk (PTT)' control using PTT input from the DPO or DPH, which is identical to SEPTA Silverliner V system's design. Details are presented in "Table 3-H" and "Table 3-L" of Woojin on-board communication SFD, 423-309, approved by DTP.

~~A VoIP module was later incorporated to the design upon the request from the customer for a 'way to communicate over the WiMax network'. However, there was no given technical requirement describing what exactly needs to be accomplished. Also there were very limited interfacing discussions and/or documentation during the design phase, which is an essential aspect of a project when different parties need to work together.~~

~~Despite the difficulties, following efforts and discussions were made with regards to this interface:~~

1) ~~October 2012~~

   A. ~~Conducted a bench test with the wayside system at Woojin test lab over VPN connection~~

   B. ~~The test was limited to verifying communication between Avaya phone and Woojin CRA-VoIP only~~

   C. ~~The test did not verify communication down to DPO and individual PEI units which required more crucial details on the interface~~

2) ~~September 2015~~

   A. ~~Woojin identified the interface issue between Woojin and Avaya systems~~

   B. ~~Woojin requested DTP to check feasibility of providing PTT signal from OCC~~

   C. ~~At this time DTP requested all parties to take "OCC to PA/Text" interface (with Penta) as the highest priority. OCC~PEI interface was not seriously considered~~

© Copyright Woojin Industrial Systems Co., Ltd.

~~3) November – December 2015~~

~~A. Woojin noticed that DTP didn't have a complete understanding on the issue~~

~~B. Woojin communicated to DTP again about how it will not work together~~

~~C. Now DTP has obtained understanding on the interfacing concern~~

~~D. Discussed various options:~~

~~i. OCC phone sending PTT signal over the WiMax – not possible (DTP)~~

~~ii. Using specific keys like mute switch or number keys – not feasible (Woojin)~~

~~iii. VOX feature – not feasible (Woojin)~~

~~iv. Meanwhile Woojin modified the on-board CPLD logic to use PEI 'Call' button as PTT. This change was implemented to car 4019 F-end and tested successfully. However, this change needed to be reviewed and approved by DTP~~

~~v. Discussed development of an external PTT signaling system to send a PTT command from OCC to CRA-CNCS, while OCC phone and CRA-VoIP talks to each other~~

© Copyright Woojin Industrial Systems Co., Ltd.

3. GENERAL DESCRIPTION ON PROPOSED SOLUTION

Woojin proposes to deploy an additional PTT switch (or a soft button in a form of software) at the OCC to signal the on-board communication system to switch between talk/listen modes.

While the on-board VoIP module (in CRA) and Avaya phone communicates through regular SIP/RTP, the on-board CNCS (in CRA) and OCC PTT switch will communicate using custom protocol to manage the talk/listen modes.

Figure below shows the functional concept of the proposed system.

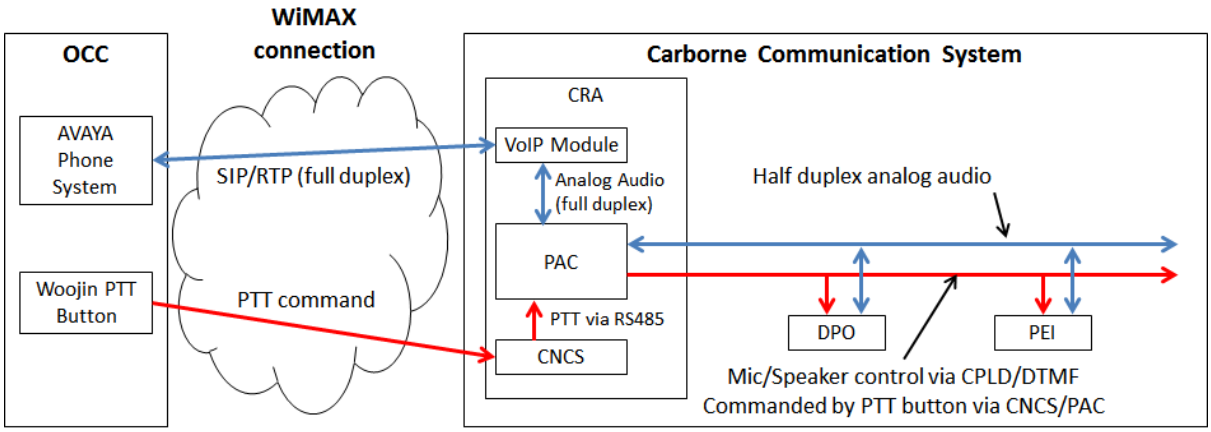

Figure below shows the limitation of the original system where the OCC and the PEI cannot appropriately communicate.

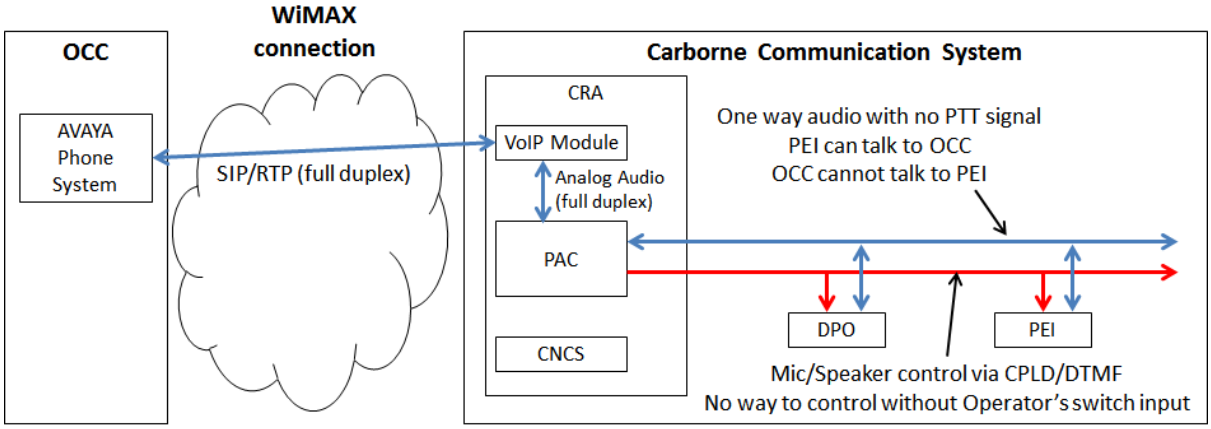

© Copyright Woojin Industrial Systems Co., Ltd.

4. FUNCTIONS

Below describes how the proposed system will function:

1) PEI requests an emergency call

2) No response from DPO for 13 seconds. This time is counted by PAC

3) If PAC does not acknowledge DPO's response by 13 seconds, PAC signals VoIP to call the specific phone number, i.e. #2000. PAC uses internal dry contact to signal VoIP

4) OCC picks up the call

5) Call session between OCC phone and on-board VoIP module is initiated

6) CNCS and OCC PTT communicates in a different communication channel using custom protocol

1. How does OCC PTT become "active"?

7) When OCC PTT is "active":

2. Do all CNCS on all cars receive "PTT active" signal at the same time?

   A. PTT sends "PTT active" signal to CNCS over WiMax network

   B. CNCS acknowledges "PTT active" and transfers the signal to RS485 serial link

   C. PAC acknowledges "PTT active" via RS485. PAC converts this to analog DTMF signal and transfers to any activated PEI:

      i. Activate PEI speaker

      ii. Deactivate PEI microphone

3. How does PEI become "activated"? Would a PEI be considered "activated" if it is in conversation with the DPO?

8) When OCC PTT is "inactive":

   A. PTT sends "PTT inactive" signal to CNCS over WiMax network

   B. CNCS acknowledges "PTT inactive" and transfers the signal to RS485 serial link

   C. PAC acknowledges "PTT inactive" via RS485. PAC converts this to analog DTMF signal and transfers to any activated PEI:

      i. Deactivate PEI speaker

      ii. Activate PEI microphone

4. Can the DPO still join a conversation between a PEI and the OCC?

9) When the call session is terminated, VoIP module signals the PAC using dry contact

© Copyright Woojin Industrial Systems Co., Ltd.

5. Imagine car 4001 starts a PEI call to the OCC, then car 4013 starts a PEI call to DPO. Does the OCC PTT activate PEI microphone and speaker on both cars?

10) PAC acknowledges the dry contact signal and clears the call session using DTMF signal (analog)

Please please start preform demonstration as soon as possible

5. COMMISSIONING AND DELIVERY

1) For on-site commissioning purpose, Woojin will perform a demonstration using Windows-based software with PTT function described in this proposal. Woojin targets to complete this activity by 1 week after DTP's formal approval on this proposal.

~~2) Upon receipt of a valid purchase order, Woojin will supply actual PTT switch hardware equipped with the same function.~~

Please provide a date for when the hardware button *CAN* be ready, commercial details should not be delaying any technical development.

6. LIMITATIONS

The proposed PTT solution only considers a single call at a time. Advanced telephone-specific features such as multiple calls from different cars, standby calls in queue, etc. are not supported.

~~Any further expansion to this interface is beyond Woojin's current business scope and technical capability. Woojin will not be able to support any other request from Hyundai-Rotem/DTP to review potential expansions besides what is proposed in this document.~~

Please remove this last paragraph as it does not contain any technical details regarding the PEI interface, and instead should be documented in an official letter.

© Copyright Woojin Industrial Systems Co., Ltd.